Unilidar

User Manual v 1.0

2023.04

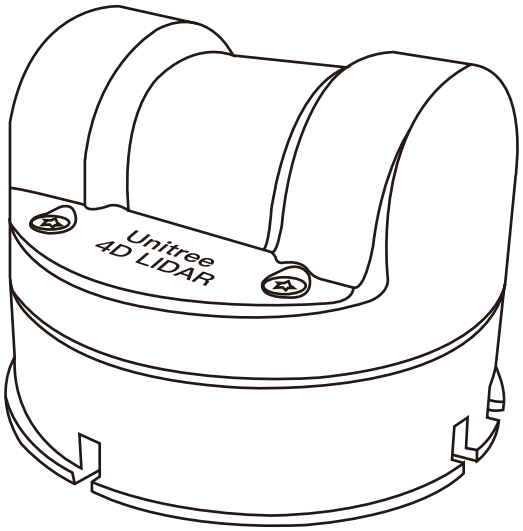

Unitree Lidar

CONTECTS

Introduction to Unilidar

·Software Purpose

Unilidar is a software designed specifically for the Unitree Laser Rangefinder, which can be used to display in real-time the point cloud data collected by the laser rangefinder when it is connected to a computer. With Unilidar, users can easily view the device status and point cloud data.

·Operating Environment

Unilidar currently supports the Windows (64-bit) operating system.

·Hardware Configuration

There are no special hardware requirements for using Unilidar, but as the software involves a lot of point cloud visualization, it is recommended to use a computer with a graphics card that has good performance.

Preparation before Use

·Connecting Unitree Laser Rangefinder to PC

Please ensure that the device is connected to a 12V power source and connected directly to the USB port of the PC using a data cable. The physical connection topology diagram of the Unitree device is as follows.

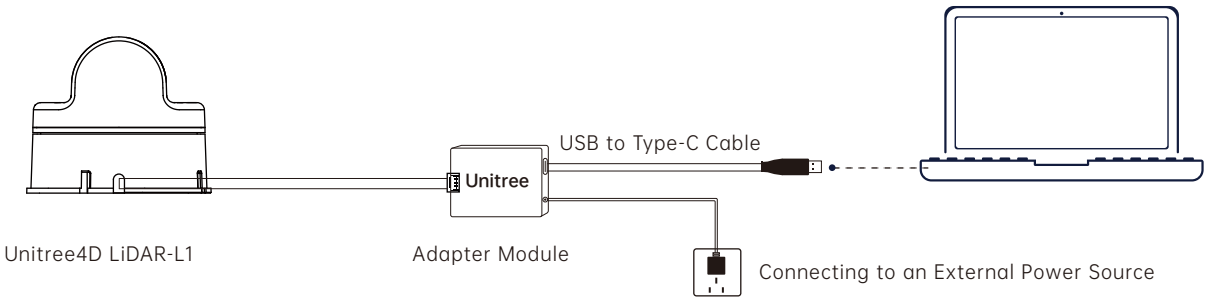

Getting Started

·Downloading and Running Unilidar

Visit the Unitree official website at www.unitree.com and download the latest version of Unilidar.

For Windows users: download and extract the files, then install the driver by opening the CP210xVCPInstaller_x64.exe program located at the root directory of the extracted folder. After installing the driver, run the Unilidar.exe program as an administrator.

·Introduction to Interface

After launching Unilidar, you will enter the main interface of the software. The Unilidar main interface consists of two parts: the Device Management Interface and the Point Cloud Display Interface.

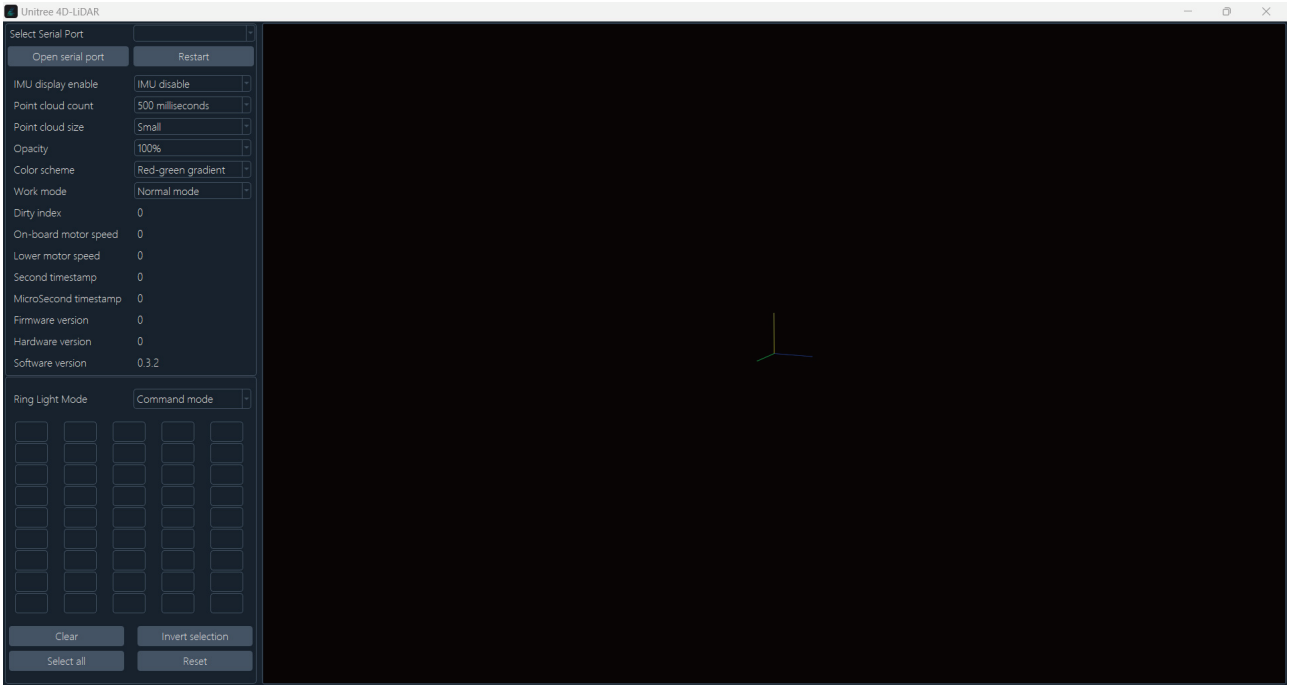

As shown in the figure above, the left side of the interface is the device management interface, and the right side is the point cloud display interface.

- After connecting to the device and starting sampling in Unilidar, the Point Cloud Display Interface will display the point cloud image, which includes a reference coordinate system.

- The point cloud image can be zoomed in or out using the mouse scroll wheel.

- The image display angle can be controlled using the left mouse button or the up-/down/left/right arrow keys on the keyboard.

- When the IMU display is launched, the coordinate system will automatically follow the direction changes of the laser rangefinder.

·Parameter Settings

If Unilidar detects a connected device, clicking on the icon to the right of the serial port number will display COM ports with the prefix "Silicon", which are the serial ports connected to the Unitree Laser Rangefinder. Select the appropriate port by clicking on it.

- Save Parameters: Send the current parameters to the device and save the corresponding parameters.

- Restart: Restart the currently connected device.

- IMU display enable: After launching the IMU display, the coordinate system will automatically follow the direction changes of the laser rangefinder. The options to enable or disable the IMU display are available in the Device Control Panel.

- Point cloud count: The display time for each point can be set to 500 milliseconds, 1 second, 2 seconds, or 4 seconds. These options are available in the Device Control Panel.

- Point cloud size: The display size for each point can be set to small, medium, or large. These options are available in the Device Control Panel.

- Opacity: The opacity of the point cloud can be adjusted to 100%, 90%, 70%, or 40%. These options are available in the Device Control Panel.

- Color scheme: The color display scheme for the point cloud can be set to red-green gradient (the color of the point cloud corresponds from red to green according to the reflectivity from high to low), yellow-blue gradient (the color of the point cloud corresponds from yellow to blue according to the reflectivity from high to low), white (all point clouds are displayed in white), or red (all point clouds are displayed in red). These options are available in the Device Control Panel.

- Work mode: The device's operating mode can be set to normal mode or standby mode. When standby mode is selected, the device enters a low-power state with a power consumption of less than 1W, the LED light is off, the high-speed motor stops rotating, the low-speed motor continues to rotate, and only IMU data is output. These options are available in the Device Control Panel.

- Ring Light Mode: The LED light ring mode of the device can be set to one of the following eight options: Command Mode, Forward Slow, Forward Fast, Reverse Slow, Reverse Fast, Triple Flip, Triple Breathing, Six-segment Breathing. These options can be selected in the Device Control Panel.

When using Command Mode, the user can customize the configuration of each LED light bead. Each input box represents the state of 8 LEDs, and the LED on/off state can be controlled by the binary value of the input, with 1 representing on and 0 representing off. For example, if 255 is entered, which is 11111111 in binary, all 8 LEDs will be on; if 1 is entered, which is 00000001 in binary, the first 7 LEDs will be off and the 8th LED will be on. There are a total of 45 input boxes, from left to right and top to bottom, for a total of 360 LEDs.

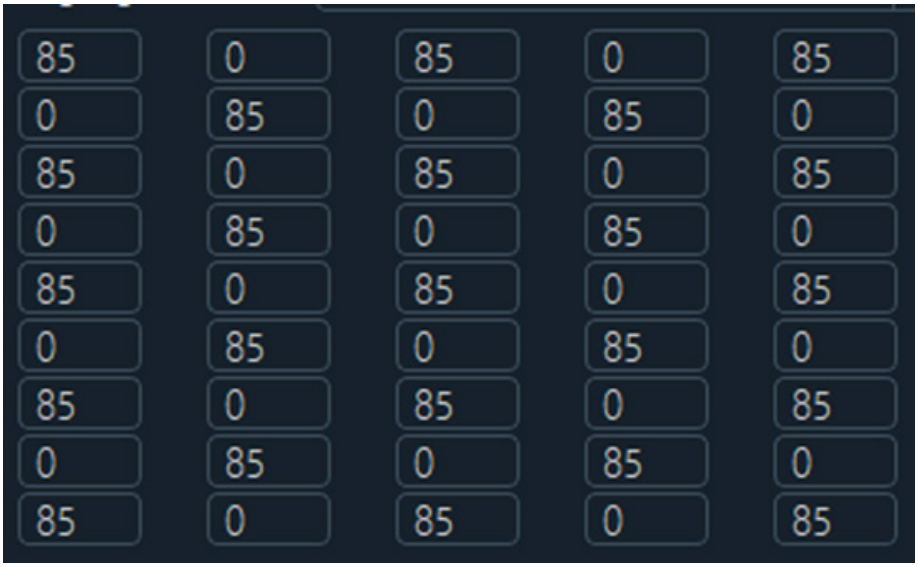

- **Clear:** To turn off all LED lights, set the value of all input boxes to 0.
- **Invert selection:** Invert the current state of all LED lights, for example, from 255 to 0.
- **Select all:** To turn on all LED lights, set the value of all input boxes to 255.
- **Reset:** Reset the LED light settings to their default values for the current LED mode.

·Status Information

- **Dirty index:** The dirt percentage of the lidar. If the dirt percentage is high, clean the radar optical window.
- **On-board motor speed:** The rotation speed of the vertical high-speed motor is measured in revolutions per minute (RPM).
- **Lower motor speed:** The rotation speed of the horizontal low-speed motor is measured in revolutions per minute (RPM).
- **Second timestamp:** The device's operating timestamp is measured in seconds (s).
- **Millisecond timestamp:** The device runs on a microsecond-level timestamp, measured in microseconds (μs).
- **Firmware version:** The current software version of the connected device.
- **Hardware version:** The current hardware version of the connected device.
- **Software version:** The current version number of the Unilidar software.

This manual will not be notified separately if updated.

You can check the latest version of the "User Manual" on the official website of Unitree.

https://www.unitree.com/en/download